Bose® ControlSpace™ CC-4 Room Controller

Installation Guide

BOSE®

Important Safety Instructions

For the intended audience

This guide has been written for professional installers of sound systems.

1. **Read these instructions – for all components before using this product.**
2. **Keep these instructions – for future reference.**
3. **Heed all warnings – on the product and in the installer's guide.**
4. **Follow all instructions.**
5. **Do not use this apparatus near water or moisture.**
6. **Clean only with a dry cloth – and as directed by Bose.**
7. **Do not block any ventilation openings. Install in accordance with the manufacturer's instructions.**
8. **Do not install near any heat sources, such as radiators, heat registers, stoves, or other apparatus (including amplifiers) that produce heat.**
9. **Refer all servicing to qualified service personnel. Servicing is required when the apparatus has been damaged in any way such as: liquid has been spilled or objects have fallen into the apparatus; the apparatus has been exposed to rain or moisture, does not operate normally, or has been dropped. Do not attempt to service this product yourself. Opening or removing covers may expose you to hazards. Please call Bose to be referred to an authorized service center near you.**
10. **See product enclosure for safety-related markings.**
11. **Only use attachments/accessories specified by the manufacturer.**

CAUTION: *Check local regulations before installing the Bose® ControlSpace™ CC-4 Room Controller. The building code may require professional installation by a skilled technician or licensed contractor. Regional electrical codes may require similar qualifications for wiring the system.*

Please read this install guide

The Bose ControlSpace CC-4 Room Controller is engineered to provide custom on-site controls for the ControlSpace ESP-88. Please read this guide to help you install and use the interfaces correctly.

©2007 Bose Corporation. No part of this work may be reproduced, modified, distributed, or otherwise used without prior written permission.

Required for installation

Provided in carton

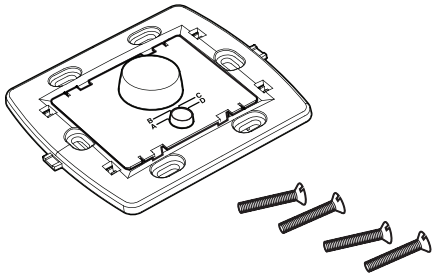

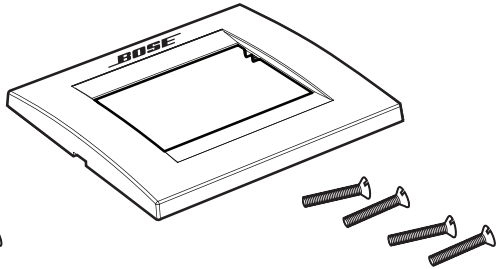

Not provided

Cable*

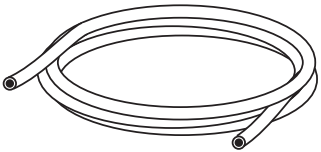

Double-gang
junction box

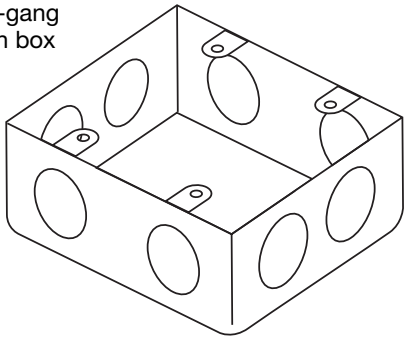

*Shielded, data-grade cable (22-24 AWG or 0.34-0.25mm^2) is recommended.
Limit runs to 500 ft for shielded cable, 100 ft for unshielded.

Note: *Use only cables which are acceptable by the local or national code.*

Assembly

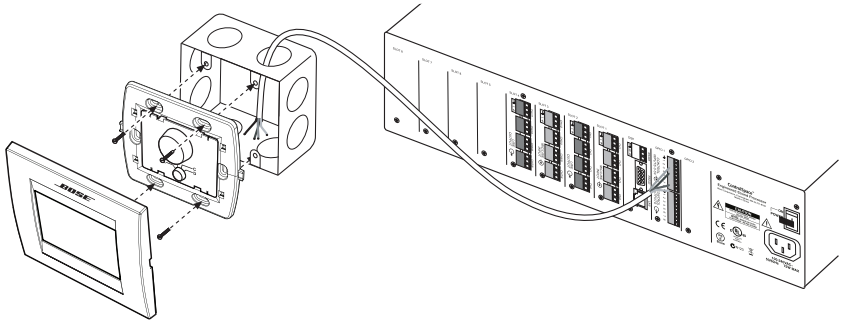

Wiring

You must program the ESP-88 GPIO inputs using the ControlSpace™ Designer™ to enable ControlSpace CC-4 Room Controller functionality.

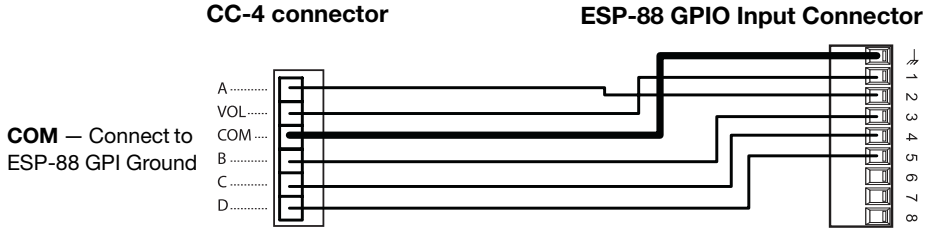

CAUTION: *Be sure to terminate cable at both ends.*

Using a junction box

Install a double-gang electrical box for each user interface.

The Bose® ControlSpace™ CC-4 Room Controller is designed to fit a North American, Japanese, Australian, and some European double-gang junction boxes.

- Mount a North American or Japanese box vertically, as shown.

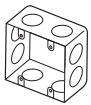

- Mount a European or Australian box horizontally, as shown.

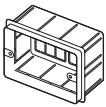

- Choose a location that is convenient for the person using the controls.
- Install the junction box recessed slightly or flush to the surface of the finished wall.

CAUTION: *Do not install a ControlSpace CC-4 Room Controller in a junction box that houses an AC power (mains) cord.*

CAUTION: *Install only in accordance with the National Electrical Code. Consult your local AHJ for further information.*

Mounting

After connecting the wires, mount the user interface in the junction box.

Two sets of screws are provided. Use the screws that are appropriate for your junction box: Use #6 for North American boxes, or M4 for Japanese, European, and Australian boxes.

CAUTION: *Do not overtighten the screws. Overtightening may cause the frame to break.*

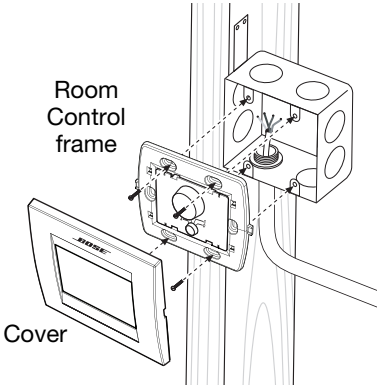

After securing the user interface frame to the junction box, snap the cover onto the frame.

To remove the cover, insert the flat head of a screwdriver into the slot on either side of the cover.

Dimensions

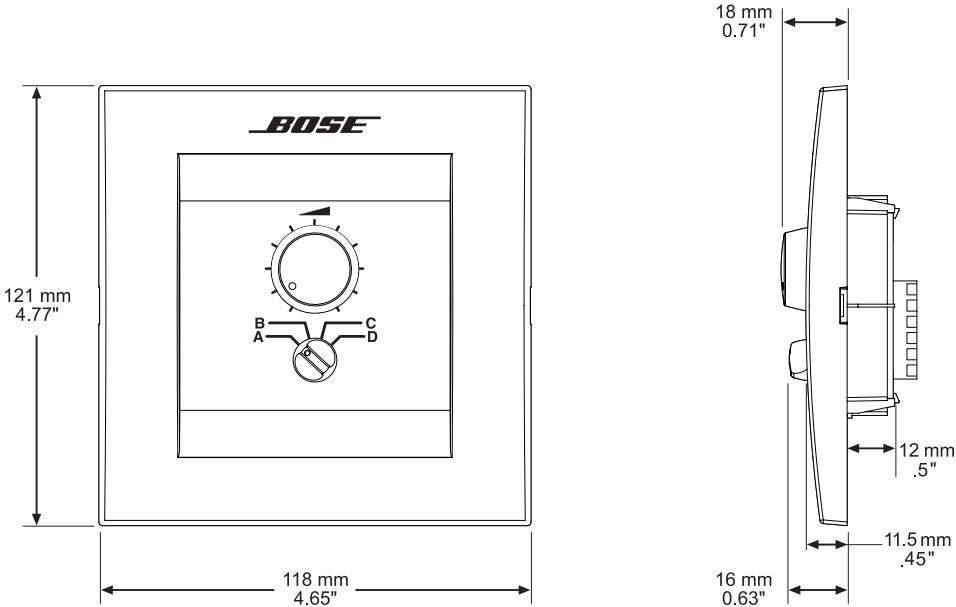
BOSE
B
A
C
D
121 mm
4.77"
118 mm
4.65"
18 mm
0.71"
12 mm
.5"
11.5 mm
.45"
16 mm
0.63"

Limited Warranty

Bose® Product Sales Conditions
Limited Warranty Policy and Conditions of Sale
Bose Corporation, The Mountain, Framingham, MA 01701

What is covered:
All parts defective in material and workmanship. This Limited Warranty for the Bose® ControlSpace™ CC-4 Room Controller covers the functionality of the product for its normal, intended use as specified in the Owner's Guide and does not cover a malfunction that has resulted from improper or unreasonable use or maintenance, accident, excess moisture, improper packing, lightning, power surges, or unauthorized tampering, alteration, or modification made by unauthorized persons or dealers. Bose systems are not designed to be used in every environment, so please review your Owner's Guide prior to installation.
WHERE PERMITTED, THE PROVISIONS OF THIS LIMITED WARRANTY ARE IN LIEU OF ANY OTHER WRITTEN WARRANTY, WHETHER EXPRESSED OR IMPLIED, WRITTEN OR ORAL, INCLUDING ANY WARRANTY OF MERCHANTABILITY OR FITNESS FOR A PARTICULAR PURPOSE.

For how long:
In countries where the duration of a warranty is not determined by statute, the Bose Limited Warranty lasts one year from the purchase date. For countries where minimum warranty terms are determined by statute, the Limited Warranty term is the longer of the statutory period or the term listed above. Notwithstanding the above, where applicable in the United States, if you qualify as a "consumer" under the Magnuson-Moss Warranty Act, then you may be entitled to any implied warranties allowed by law for the period of the expressed Limited Warranty as set forth below. Some states do not allow limitations on how long an implied Limited Warranty lasts, so the above limitation may not apply to you.

What we will do:
We will repair or replace any defective parts within a reasonable period of time and free of charge.

How you can obtain Limited Warranty service:
1. You can ship the system to either a Bose Service Agency or to Bose directly with a proof of purchase from an authorized dealer. Please:
   A. Properly and carefully pack the product for shipping. If you need a carton for shipping, contact Bose for a new carton.
   B. Label and ship the product to the appropriate Bose location.
   C. Please contact Bose to get a return reference number. Place this number prominently on the outside of the carton.
2. You can return the system with proof of purchase from an authorized dealer to a Bose Service Agency or directly to Bose. Proof of purchase is not required where it is excluded by statute.

Other Rights:

EXCLUSIVE REMEDY:
THIS LIMITED WARRANTY IS FULLY TRANSFERABLE PROVIDED THAT THE CURRENT OWNER FURNISHES THE ORIGINAL PROOF OF PURCHASE FROM AN AUTHORIZED BOSE DEALER. THE MAXIMUM LIABILITY OF BOSE SHALL NOT EXCEED THE ACTUAL PURCHASE PRICE PAID BY YOU FOR THE PRODUCT. SOME PLACES DO NOT ALLOW LIMITATIONS OR THE EXCLUSION OR LIMITATION OF RELIEF, SO THE ABOVE LIMITATIONS OR EXCLUSIONS MAY NOT APPLY TO YOU.

OTHER CONDITIONS:
FOR YOUR BENEFIT, WE RECOMMEND THAT YOU RECORD YOUR SERIAL NUMBER(S), FOUND ON THE PRODUCT(S), AND OTHER PURCHASE INFORMATION, AND KEEP IT WITH YOUR PERSONAL RECORDS ALONG WITH PROOF OF PURCHASE. IF NECESSARY, THIS INFORMATION WILL ALLOW US TO BETTER SERVE YOUR NEEDS. THIS LIMITED WARRANTY GIVES YOU SPECIFIC RIGHTS SUBJECT TO SPECIFIED CONDITIONS. YOU MAY ALSO HAVE OTHER LEGAL RIGHTS THAT APPLY TO THE PRODUCT YOU HAVE ACQUIRED. THESE LEGAL RIGHTS VARY FROM STATE TO STATE OR COUNTRY TO COUNTRY. SOME PLACES DO NOT ALLOW THE EXCLUSION, RESTRICTION, OR MODIFICATION OF CERTAIN IMPLIED RIGHTS OR THEIR EFFECT. IN THOSE SITUATIONS, THIS LIMITED WARRANTY WILL ONLY APPLY TO THE EXTENT THAT THE APPLICABLE LAW ALLOWS. OTHER LAWS PROVIDE YOU WITH A STATUTORY CLAIM AGAINST THE SELLER.
The laws of your state or country may provide you with legal claims against the seller or manufacturer of this product. The Limited Warranty does not affect those rights.

Remedies:
The provisions of this Limited Warranty are in lieu of any other warranties or conditions, except those provided by law.
This Limited Warranty does not affect any legal rights provided to you by law and does not preclude any legal remedy you may have under the law.
This Limited Warranty is fully transferable provided that the current owner furnishes the original proof of purchase from an authorized Bose dealer.
This Limited Warranty is void if the label bearing the serial number has been removed or defaced.

Better sound through research®

©2007 Bose Corporation, The Mountain
Framingham, MA 01701-9168 USA
AM306693 Rev.01